ORTAL
YOUR LIFE. YOUR FIRE

250H TS Screen

Manufacturer Update – Fireplace Legs Modification
Manufacturer Effective Date: March 20th 2018
Serial Number Forward #15275

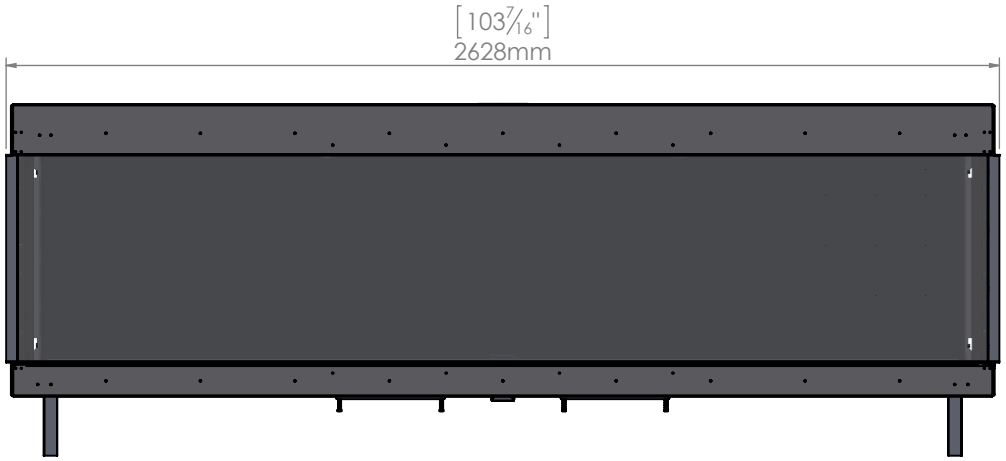

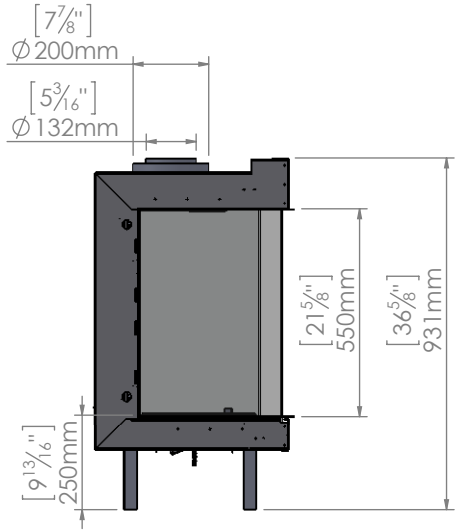

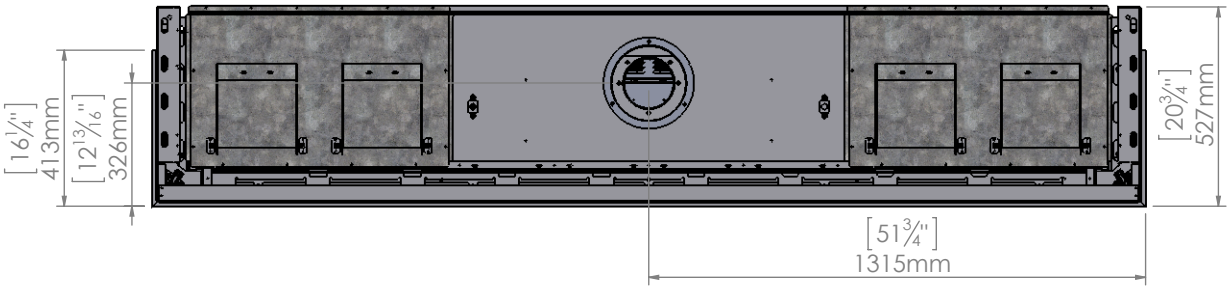

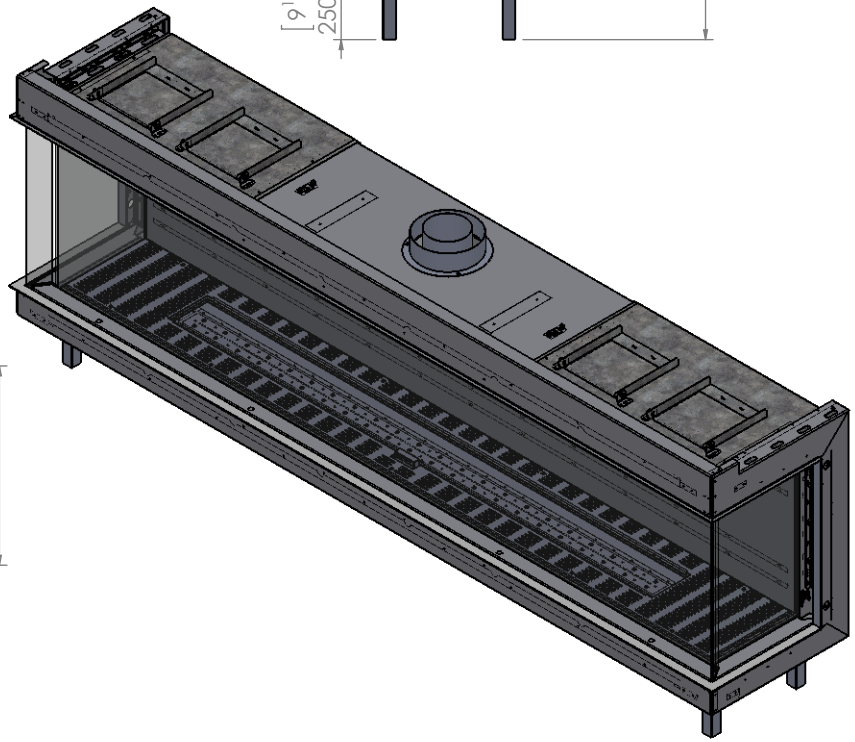

5/15/2019