ORTAL
YOUR LIFE. YOUR FIRE

250H TS
Double Glass

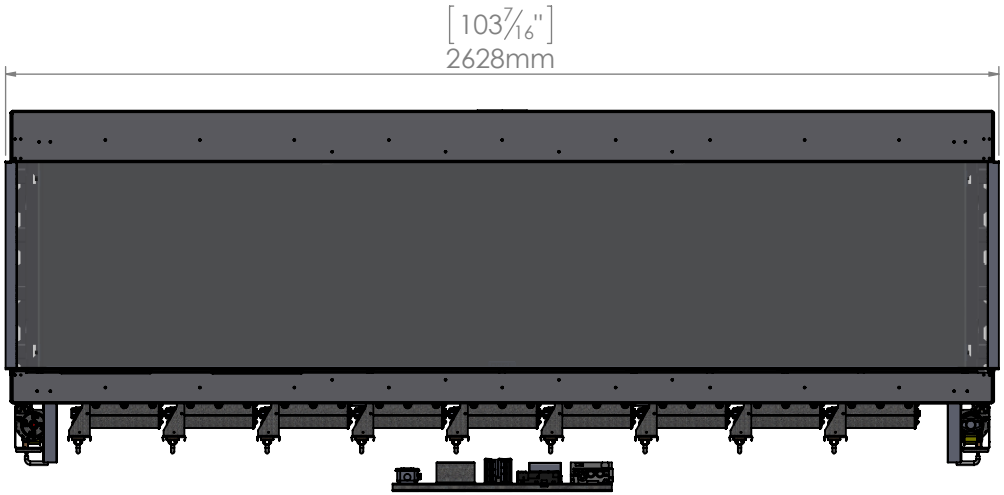

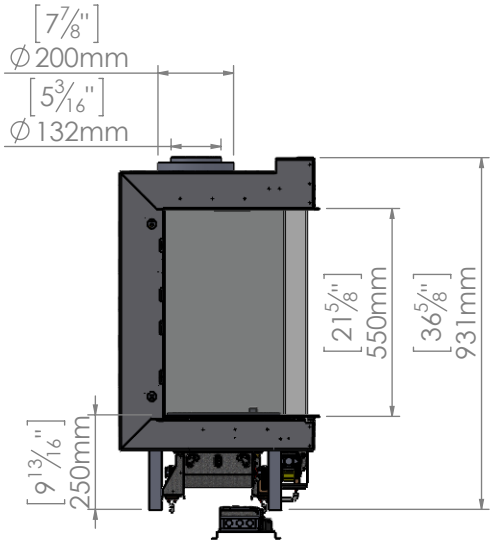

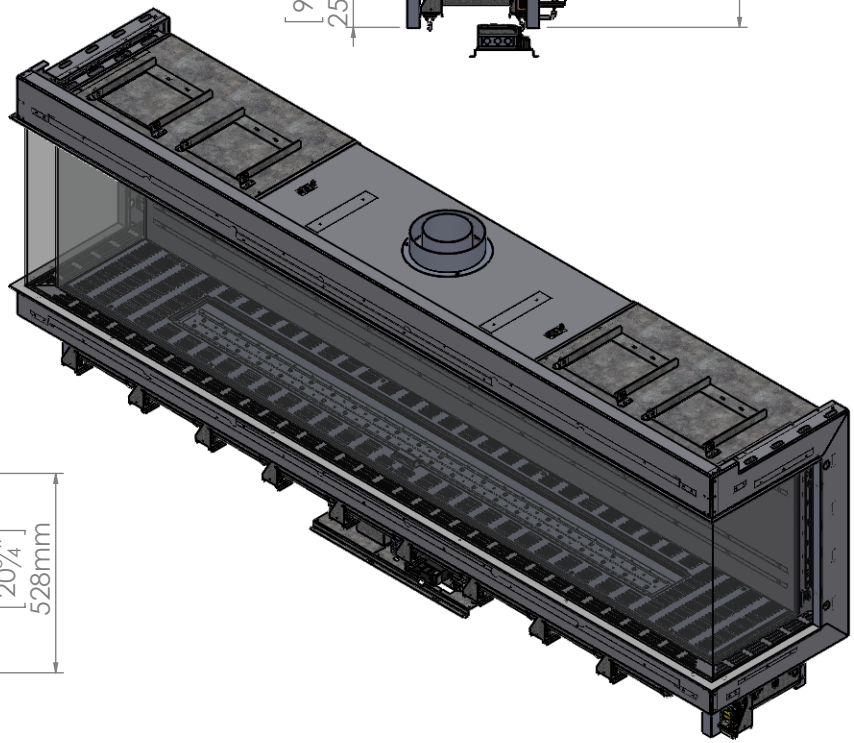

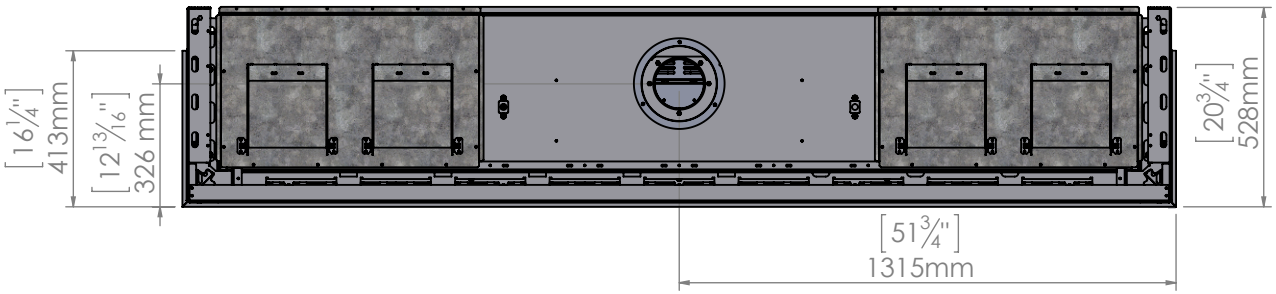

5/15/2019