ORTAL
YOUR LIFE. YOUR FIRE

250H RS (Screen)

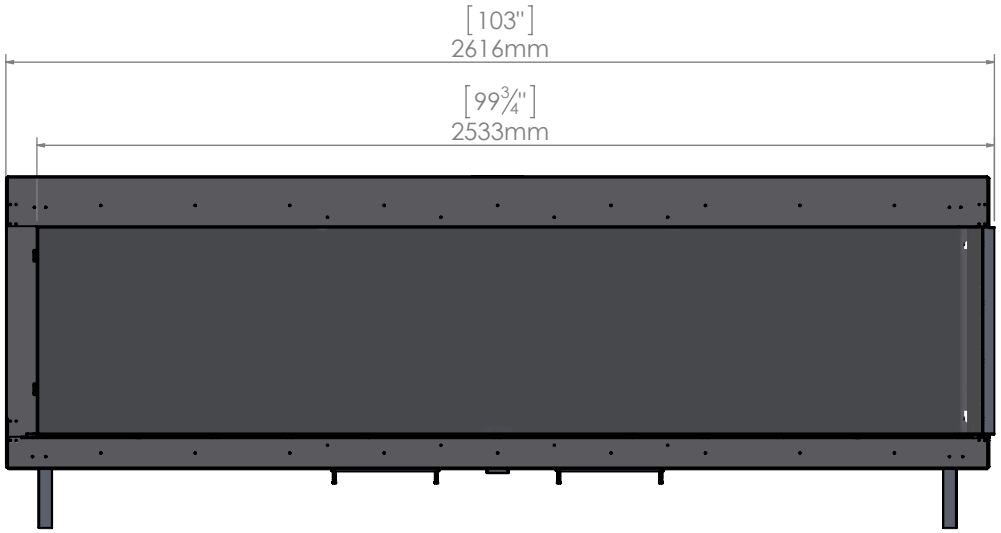

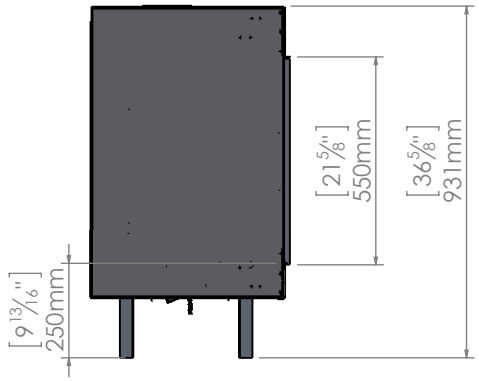

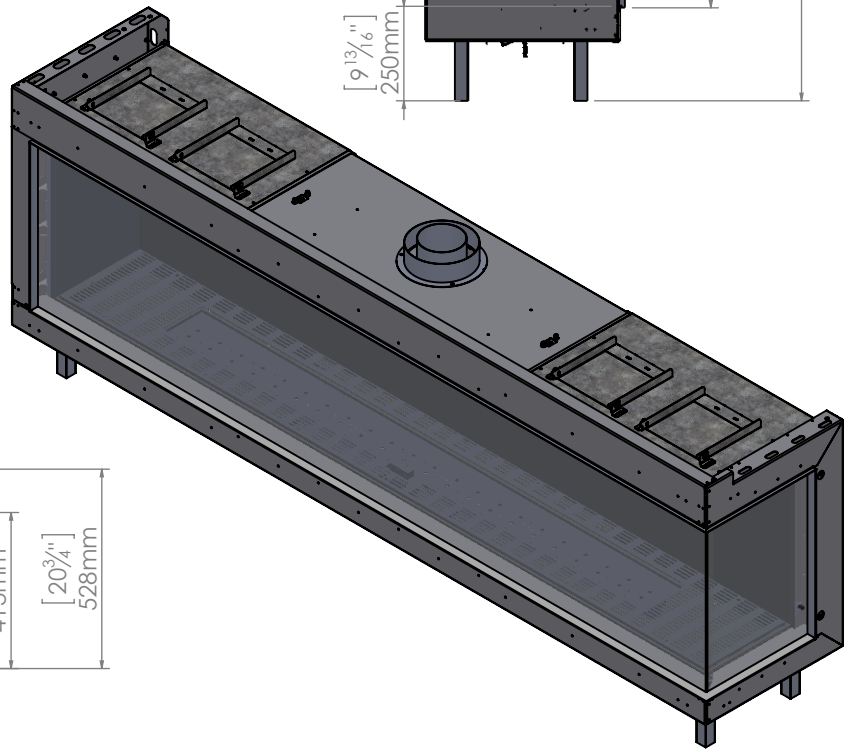

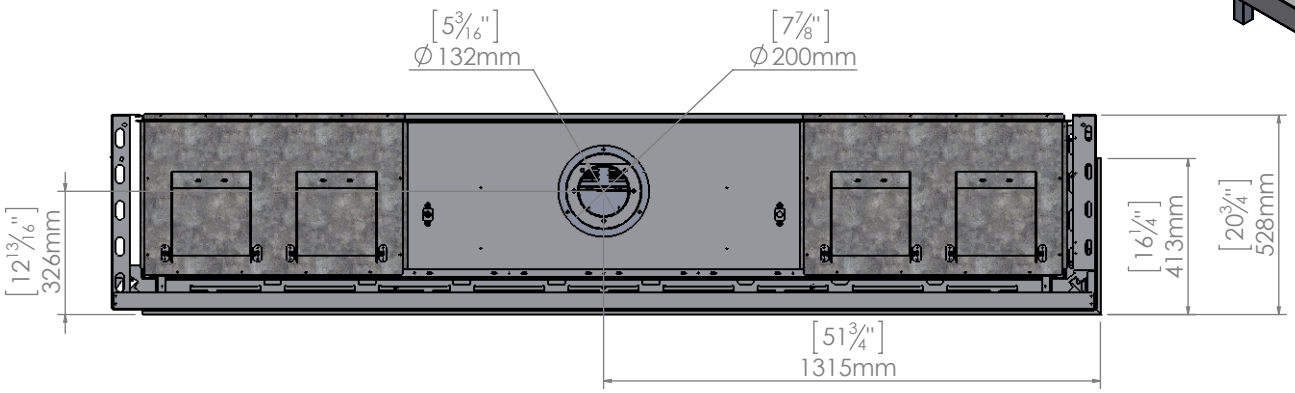

5/15/2019