ORTAL
YOUR LIFE. YOUR FIRE

170H RS Screen

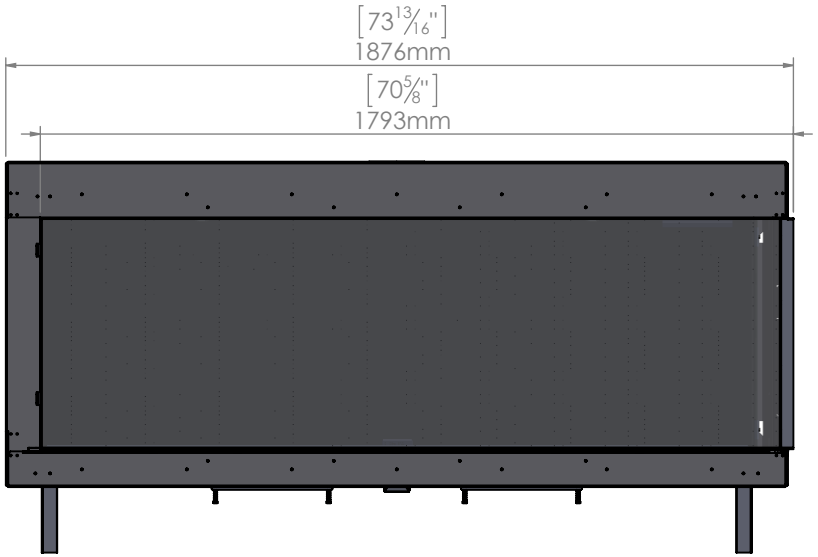

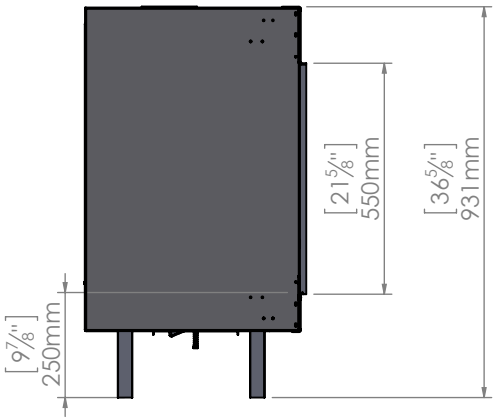

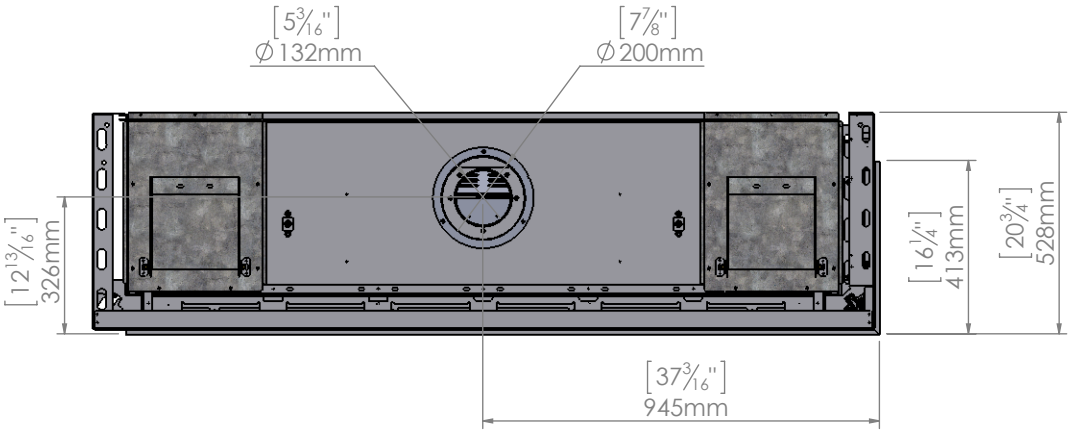

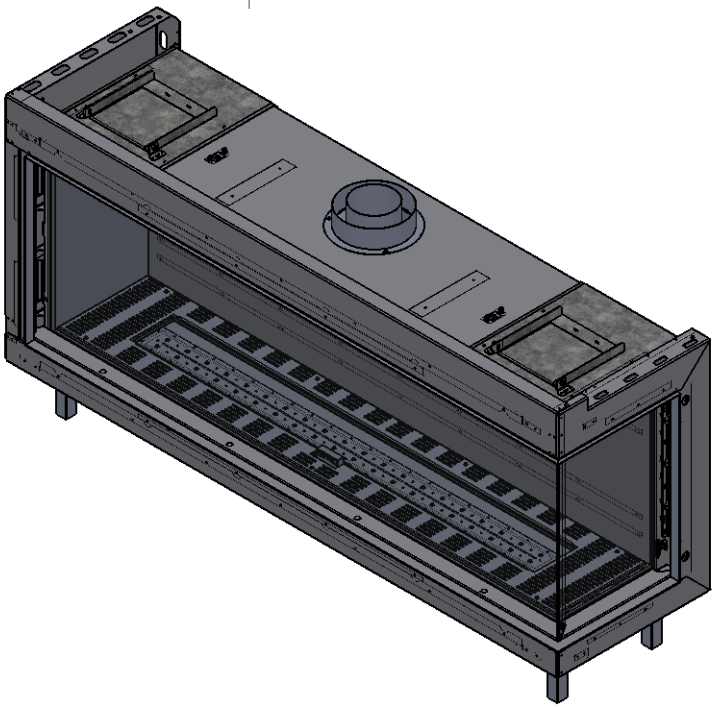

5/15/2019