ORTAL
YOUR LIFE. YOUR FIRE

170H RS (Double Glass)

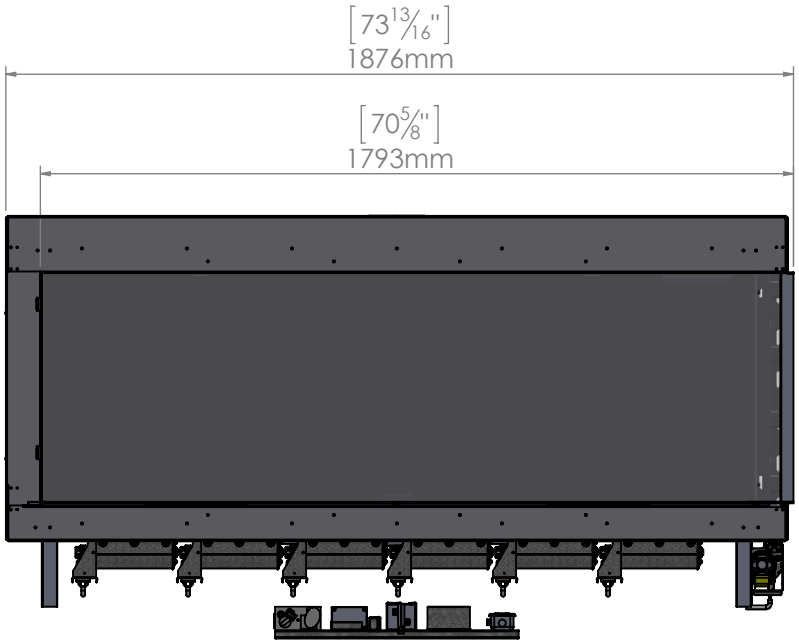

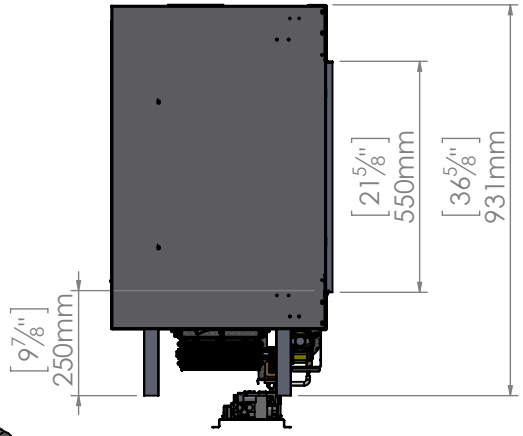

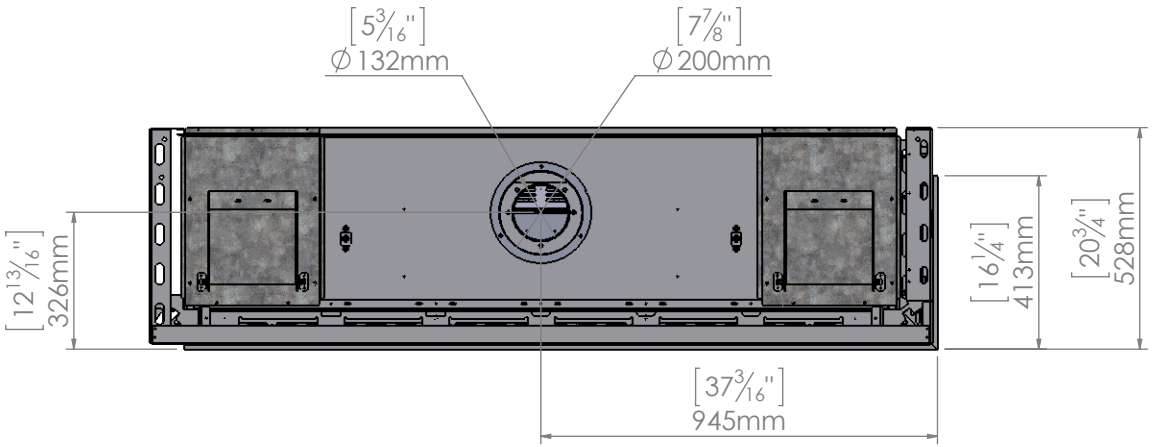

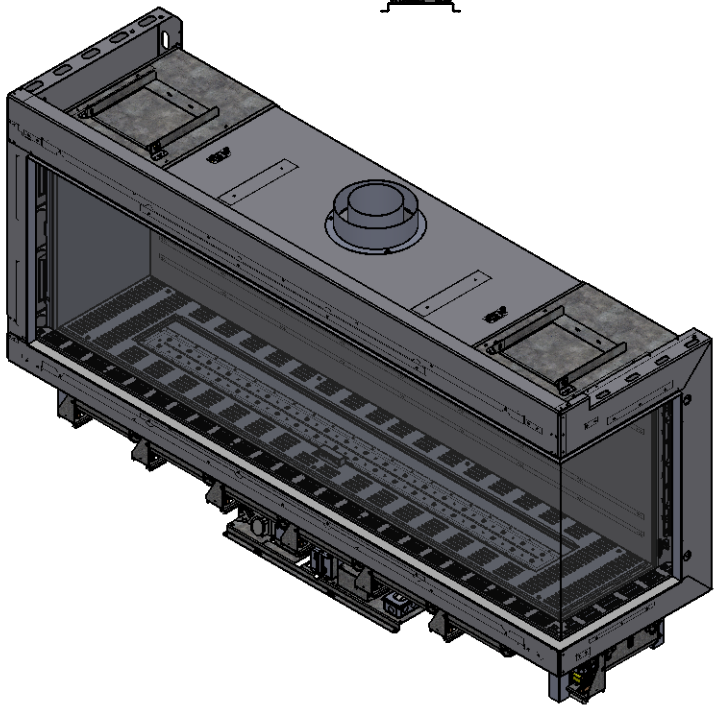

5/15/2019