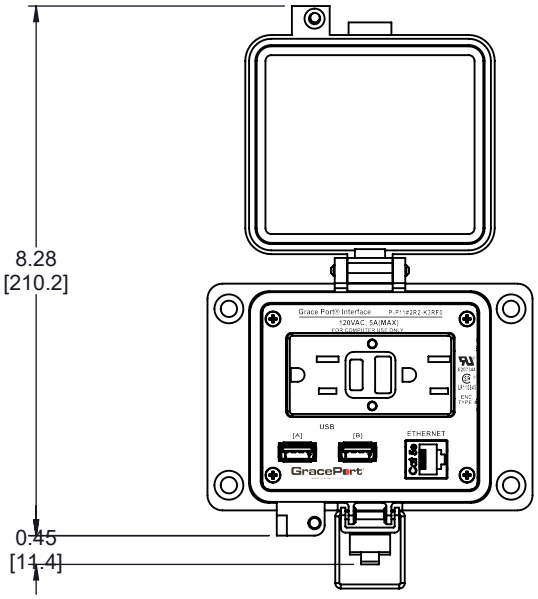

Panel Cutout

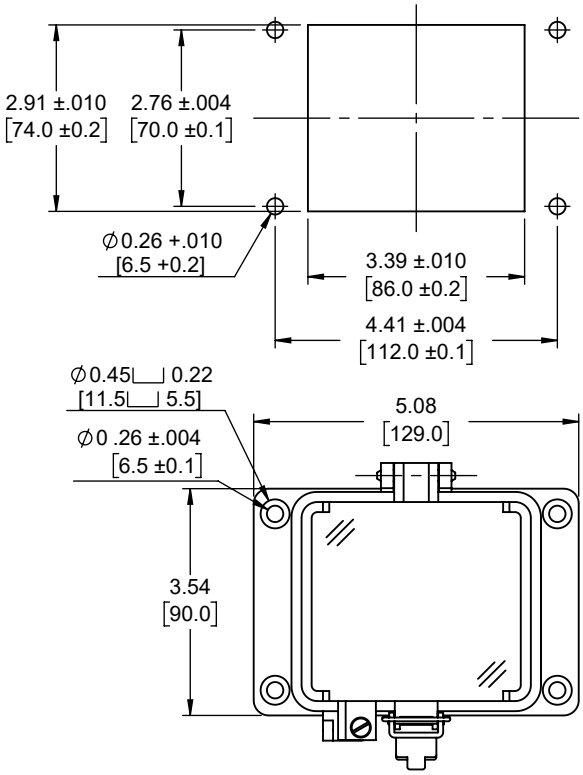

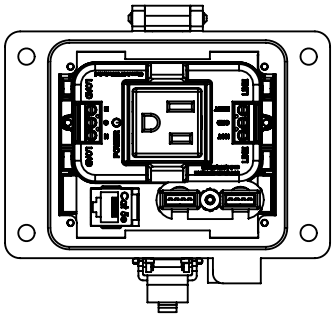

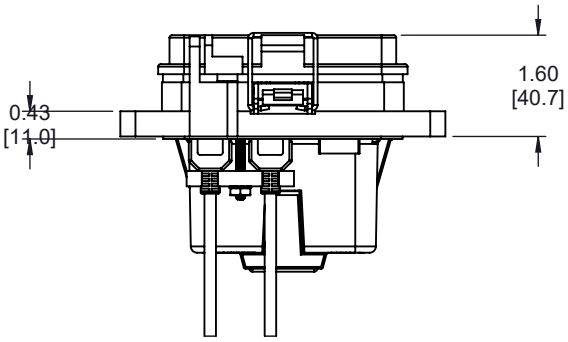

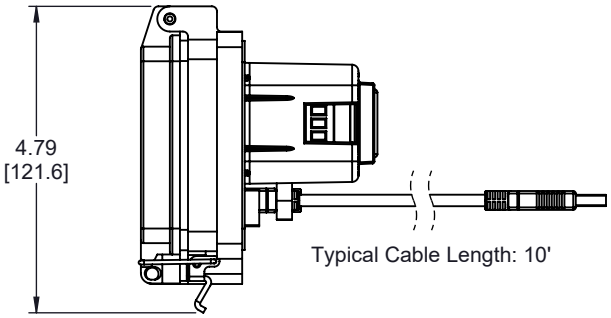

NOTE:

1) REFER TO INSTALLATION INSTRUCTIONS TO ENSURE PROPER INSTALLATION.
2) ALWAYS FOLLOW YOUR LOCAL/FACILITY ELECTRICAL CODES AND PROCEDURES.
3) FOR DETAILED COMPONENT WIRING AND SPECIFICATIONS, REFER TO THE APPLICABLE DATA SHEETS.
4) COMPONENT LOCATIONS OUTLINED IN DRAWING ARE APPROXIMATE
5) FOR ACTUAL PRODUCT CONFORMITY, LISTINGS AND CERTIFICATIONS, REFER TO FINISHED PRODUCT FACEPLATE DRAWING, OR CONSULT FACTORY.